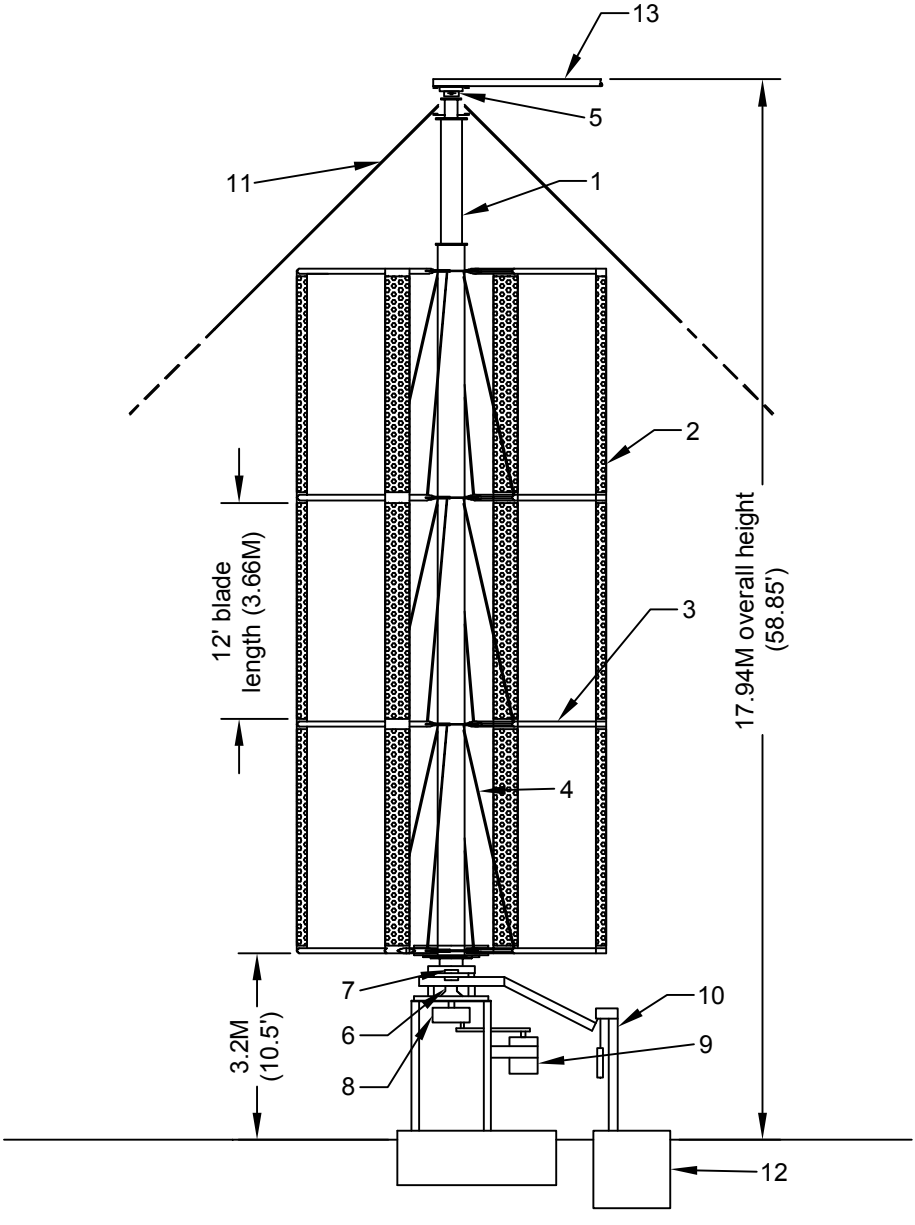
13
5
11
1
2
12' blade
length (3.66M)
3
17.94M overall height
(58.85')
4
7
10
6
9
3.2M
(10.5')
8
12